REV	DESCRIPTION	DATE	APPD
2.0	FCN0252	15/08/11	JG
1.0	RELEASED	02/10/09	FT

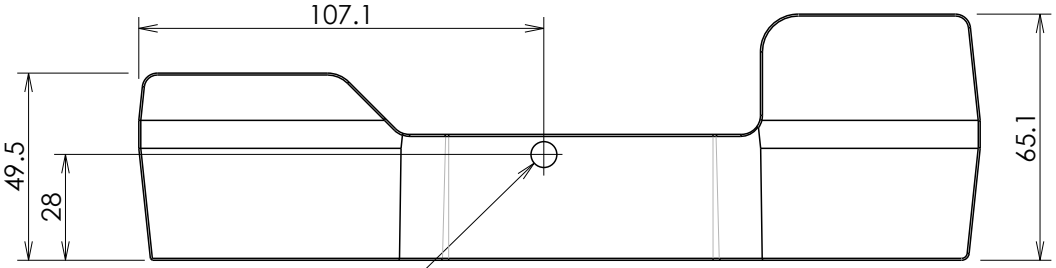

VIEW OF SIDE

CENTRE OF GRAVITY

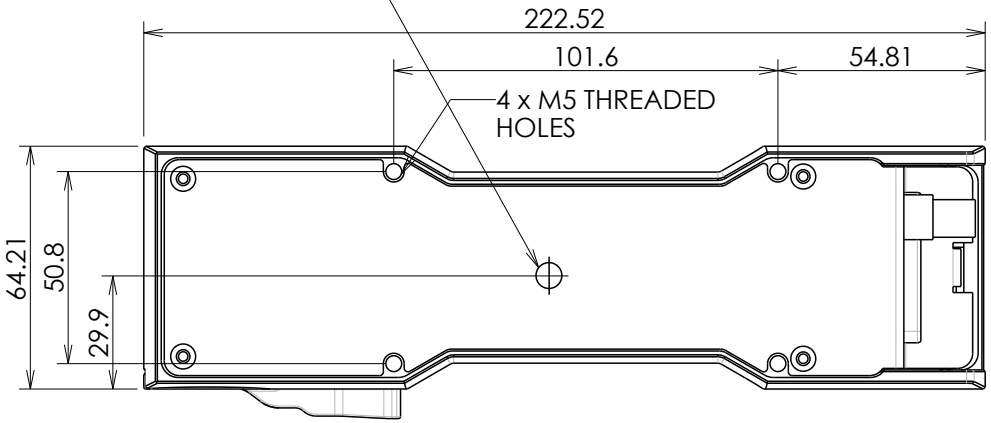

VIEW OF BACK

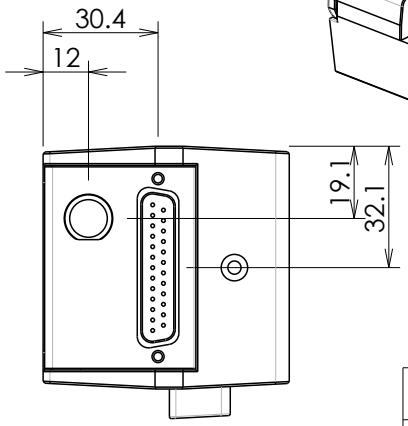

VIEW OF BASE

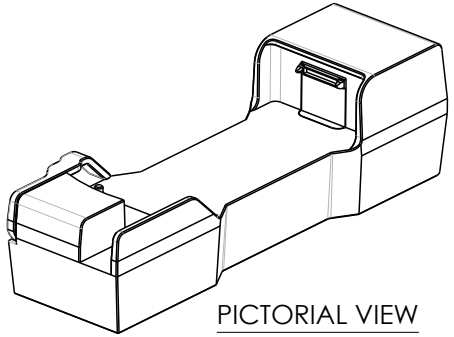

PICTORIAL VIEW

DRAWING APPLIES TO PART No:
CRP_04001 / FC9555D25M4M

GENERAL LIMITS (UNLESS STATED) LINEAR: ± 0.25 HOLES : ± 0.10 ANGLES: ± 1° ALL DIMENSIONS IN mm.	DRN: MIKE.S. CKD: APPD: ISSUED: 27-Aug-09	Flightcell™ Flightcell International Limited PO Box 1481, Nelson, New Zealand Ph:+64 3 545 8652 www.flightcell.com	FLIGHTCELL IRIDIUM 9555 PHONE CRADLE WITH D25 CONNECTOR Flightcell International Ltd. NCAGE E5340
MASS: 680grams	ORIGINAL SCALE: 1:2 DRAWING SIZE : A4	DO NOT SCALE OFF DRG IF IN DOUBT ASK!	DRG No: DRW_CRP_04_001 — SHT 1 OF 1